domnick hunter

PNEUDRI MAXI
MX102 – MX110

SERVICE MANUAL

CONTENTS

1. Safety Warnings 4
1.1 Markings and symbols 5
1.2 Hazardous Substances 5
2.0 Technical Specification 6
2.1 Dimensions 7
3.0 Servicing 8
3.1 Cleaning 8
3.2 Service Intervals 8
3.3 Service Kits 9
3.4 Service A – Exhaust Silencer Replacement 10
3.5 Service B – Filter Element Change 11
3.6 Service C – Hygrometer Sensor Replacement 12
3.7 Service D – Valve Overhaul 13
3.7.1 Inlet Valve Overhaul 14
3.7.2 Exhaust Valve Overhaul 15
3.7.3 Outlet Valve Overhaul 16
3.7.4 5/2 Control Valve Overhaul 17
3.8 Service E – Desiccant Change 18
4 Wiring Schematics 21
5 Pneumatic Control Schematics 24

1. Safety Warnings

Important: Do not operate this equipment until the safety information and instructions in this user guide have been read and understood by all personnel concerned.

Only competent personnel trained, qualified, and approved by domnick hunter should perform commissioning, service and repair procedures.

Improper operation or maintenance of the dryer could be dangerous and result in an accident causing injury or death.

When handling, installing, operating and maintaining this equipment, personnel must employ safe engineering practices and observe all related regulations, health & safety procedures, and legal requirements for safety.

Ensure that the equipment is depressurised and electrically isolated, prior to carrying out any of the scheduled maintenance instructions specified within this user guide.

Most accidents that occur during the operation and maintenance of machinery are the result of failure to observe basic safety rules and procedures. Accidents can be avoided by recognising that any machinery is potentially hazardous.

domnick hunter can not anticipate every possible circumstance which may represent a potential hazard. The warnings in this manual cover the most known potential hazards, but by definition can not be all-inclusive. If the user employs an operating procedure, item of equipment or a method of working which is not specifically recommended by **domnick hunter** the user must ensure that the equipment will not be damaged or become hazardous to persons or property.

Only use genuine domnick hunter ltd spare parts. The use of non genuine spare parts of the application of procedures not outlined in this manual could result in the dryer becoming unsafe and will invalidate your warranty.

Use of the equipment in a manner not specified within this user guide may impair safety and invalidate your warranty.

Should you require an extended warranty, tailored service contracts or training on this equipment, or any other equipment within the domnick hunter range, please contact your local domnick hunter office.

Details of your nearest **domnick hunter** sales office can be found at: www.domnickhunter.com.

Reference Materials

This maintenance manual outlines procedures for carrying out service activities on the domnick hunter Ltd MX dryer range. For details of the dryer function, specification and limitations refer to the following documents: -

a) MX Dryer User Guide (dh part no.178620001)
b) Advanced Controller Addendum (dh part no. 178620002)
c) MXA Controller Maintenance Engineer Guide (available from domnick hunter service department)
d) MXS Controller Maintenance Engineer Guide (available from domnick hunter service department)

1.1 Markings and symbols

The following markings and international symbols are used on the equipment and within this user guide:

	Caution, Read the User Guide.		**May start automatically without warning**
	Risk of electric shock.		**Wear ear protection.**
Warning	**Highlights actions or procedures which, if not performed correctly, may lead to personal injury or death.**		**Use lifting equipment**
Caution	**Highlights actions or procedures which, if not performed correctly, may lead to damage to this equipment.**		**Use a forklift truck**
Warning	**Highlights actions or procedures which, if not performed correctly, could lead to electric shock.**		**When disposing of old parts always follow local waste disposal regulations**
	Pressurised components on system		**Conformité Européenne**

1.2 Hazardous Substances

The chambers of the dryer are filled with DRYFIL desiccant material. This is a powerful desiccant and will dry out the atmosphere, eyes, nose, and mouth.

If the desiccant comes into contact with the eyes or skin, wash the affected area with copious amounts of water.

DRYFIL may contain some dust therefore an orinasal dust respirator should be worn when handling the equipment. Adequate ventilation should be provided when working with desiccant.

The desiccant is classified as non-hazardous for transportation.

DRYFIL will evolve heat on contact with moisture and may generate pressure in a confined space. DRYFIL should therefore be stored in a dry place in its original packaging.

DRYFIL is non-flammable. Any fire should be fought by means appropriate to the material causing the fire.

DRYFIL should be disposed of into a licensed land fill site.

2.0 Technical Specification

This specification is valid when the equipment is located, installed, operated, and maintained as specified within this user guide.

Parameter	Units	MX102 – MX104	MX105 – MX110
Minimum Inlet Pressure	bar g (psi g / MPa g)	4 (58 / 0.4)	
Maximum Inlet Pressure	bar g (psi g / MPa g)	13 (190 / 1.3)	
Inlet Temperature	°C (°F)	2 – 50 35 - 122	
Inlet Connection	Inches	2”	2 1/2”
Outlet Connection	inches	2”	2 1/2”

	Dewpoint -40°C (-40°F)			Dewpoint -70°C (-100°F)			Dewpoint -20°C (-4°F)		
Model	**cfm**	**m^3 / min**	**m^3 / hour**	**cfm**	**m^3 / min**	**m^3 / hour**	**cfm**	**m^3 / min**	**m^3 / hour**
MX102c	240	6.80	408	168	4.76	285	264	7.48	449
MX103c	360	10.19	611	252	7.14	428	396	11.21	673
MX103	450	12.75	765	315	8.92	535	495	14.02	841
MX104	600	17.00	1020	420	11.89	713	660	18.69	1121
MX105	750	21.25	1275	525	14.87	892	825	23.36	1402
MX106	900	25.50	1530	630	17.84	1070	990	28.03	1682
MX107	1050	29.75	1785	735	20.82	1248	1155	32.70	1962
MX108	1200	34.00	2040	840	23.79	1427	1320	37.38	2243
MX109	-	-	-	945	26.76	1605	-	-	-
MX110	-	-	-	1050	29.73	1783	-	-	-

Note:

Stated flows are for operation at 7 bar g (102 psi g) with reference to 20°C, 1 bar (a), 0% relative water vapour pressure.

The MX 109 and MX110 are for 70°C pdp (-100°F pdp) applications only.

Parameter	Units	MX102 – MX110	
Supply Voltage	V ac	100 - 240V ac 50/60Hz ± 10%	
Power	W	MXS = 18W Max MXA = 35W Max	
Fuse	A		
Breaking Capacity	A		

Parameter	Units	MX102 – MX110
Temperature	°C (°F)	2 – 45 35 - 113
Humidity	-	50% @ 40°C (80% MAX • 31°C)
IP Rating	-	IP65 / >NEMA 13
Pollution Degree	-	2
Installation Category	-	II
Altitude	m (ft)	< 2000 (6562)
Noise	dB(A)	<80dBA

2.1 Dimensions

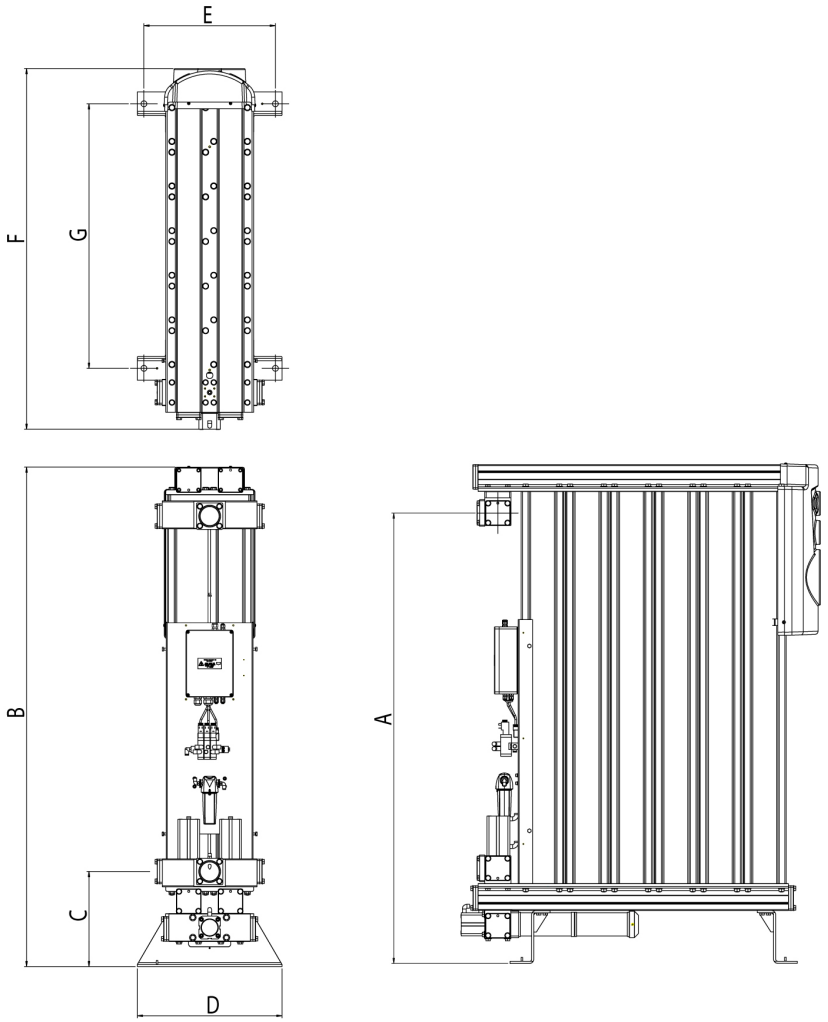

Model	A mm (inches)	B mm (inches)	C mm (inches)	D mm (inches)	E mm (inches)	F mm (inches)	G mm (inches)	Weight Kg
MX102C	1461 (57.52)	1647 (64.84)	360.5 (14.17)	550 (21.65)	500 (19.7)	696 (27.4)	326 (12.83)	235
MX103C	1461 (57.52)	1647 (64.84)	360.5 (14.17)	550 (21.65)	500 (19.7)	865 (34.06)	495 (19.49)	316
MX103	1706 (67.17)	1892 (74.49)	360.5 (14.17)	550 (21.65)	500 (19.7)	865 (34.06)	495 (19.49)	355
MX104	1706 (67.17)	1892 (74.49)	360.5 (14.17)	550 (21.65)	500 (19.7)	1034 (40.71)	664 (26.14)	450
MX105	1706 (67.17)	1892 (74.49)	360.5 (14.17)	550 (21.65)	500 (19.7)	1203 (47.36)	833 (32.8)	543
MX106	1706 (67.17)	1892 (74.49)	360.5 (14.17)	550 (21.65)	500 (19.7)	1372 (54.02)	1002 (39.45)	637
MX107	1706 (67.17)	1892 (74.49)	360.5 (14.17)	550 (21.65)	500 (19.7)	15.41 (60.67)	1171 (46.10)	731
MX108	1706 (67.17)	1892 (74.49)	360.5 (14.17)	550 (21.65)	500 (19.7)	1710 (67.32)	1340 (52.76)	825
MX109	1706 (67.17)	1892 (74.49)	360.5 (14.17)	550 (21.65)	500 (19.7)	1879 (73.98)	1509 (59.41)	919
MX110	1706 (67.17)	1892 (74.49)	360.5 (14.17)	550 (21.65)	500 (19.7)	2048 (80.63)	1678 (66.06)	1013

3.0 Servicing

The recommended Service procedures identified in table 5.2 and all other repair and calibration work should be undertaken by a domnick hunter trained, qualified and approved engineer.

3.1 Cleaning

Clean the equipment with a damp cloth only and avoid excessive moisture around any electrical sockets. If required you may use a mild detergent, however do not use abrasives or solvents as they may damage the warning labels on the equipment.

3.2 Service Intervals

Description of Service Requirement		Typical Recommended Service Interval						
Component	**Operation**	**Daily**	**Weekly**	**3 Months**	**6 Months**	**12 Months**	**24 Months**	**30 Months**
Dryer	Check POWER ON indicator is illuminated.		-	-	-	-	-	-
Dryer	Check STATUS / FAULT indicators located on the controller.		-	-	-	-	-	-
Dryer	Check for air leaks.		-	-	-	-	-	-
Dryer	Check the pressure gauges during purging for excessive back pressure.	-	-		-	-	-	-
Dryer	Check the condition of electrical supply cables and conduits.	-	-		-	-	-	-
Dryer	Check for cyclic operation.	-	-	-		-	-	-
Dryer	Replace the active exhaust silencers **Recommended Service A**	-	-	-		-	-	-
Filtration	Replace the inlet, outlet and control air filters, and service drains. **Recommended Service B**	-	-	-	-		-	-
Dryer	Replace / Calibrate dewpoint transmitter (DDS Units only). **Recommended Service C**	-	-	-	-		-	-
Dryer	Replace the valve seats and seals. **Recommended Service D**	-	-	-	-	-		-
Dryer	Replace the Desiccant. **Recommended Service E**	-	-	-	-	-	-	

Check

Replace

3.3 Service Kits

Service Kit	Description	Kit No	Quantity
A – Silencer Service	Kit: Silencer Element MX	608620090	See table below
B – Filter Service	Refer to Filter user guide (171184000)		
C – Hygrometer Service	Replacement dewpoint transmitter. (DDS Units only)	608203580	1
D – Valve Service	Kit: Valve Overhaul <9 Barg	608620091	1
	Kit: Valve Overhaul >9 Barg	608620092	1
E – Desiccant Service	AA 11.2 Litre Bag	608203661	See table below
	MS 11.2 Litre Bag	608203662	See table below
	WS 11.2 Litre Bag	608203663	See table below
	Kit: Column Seals MX	608620098	1
	Snow storm filler	608201051	1

	MX102C			MX103C			MX103			MX104			MX105			MX106			MX107			MX108			MX109	MX110
	-20	-40	-70	-20	-40	-70	-20	-40	-70	-20	-40	-70	-20	-40	-70	-20	-40	-70	-20	-40	-70	-20	-40	-70	-70	-70
Dryfil AA	9	8		13	12		16	14		21	19		26	24		31	28		36	33		41	37			
Dryfil MS		1	7		2	11		2	13		3	17		3	21		4	25		4	29		6	30	37	42
Dryfil WS			2			3			4			5			6			7			8			9	10	11
Seals	1	1	1	1	1	1	1	1	1	1	1	1	1	1	1	1	1	1	1	1	1	1	1	1	1	1
Silencer	1	1	1	1	1	1	1	1	1	2	2	2	2	2	2	2	2	2	3	3	3	3	3	3	3	3

3.4 Service A – Exhaust Silencer Replacement

Kit No: 608620090

Warning

Ensure that the dryer is electrically and pneumatically de-energised and fully de-pressurised before continuing with this procedure.

It is recommended that suitable gloves be worn, when handling used filter elements.

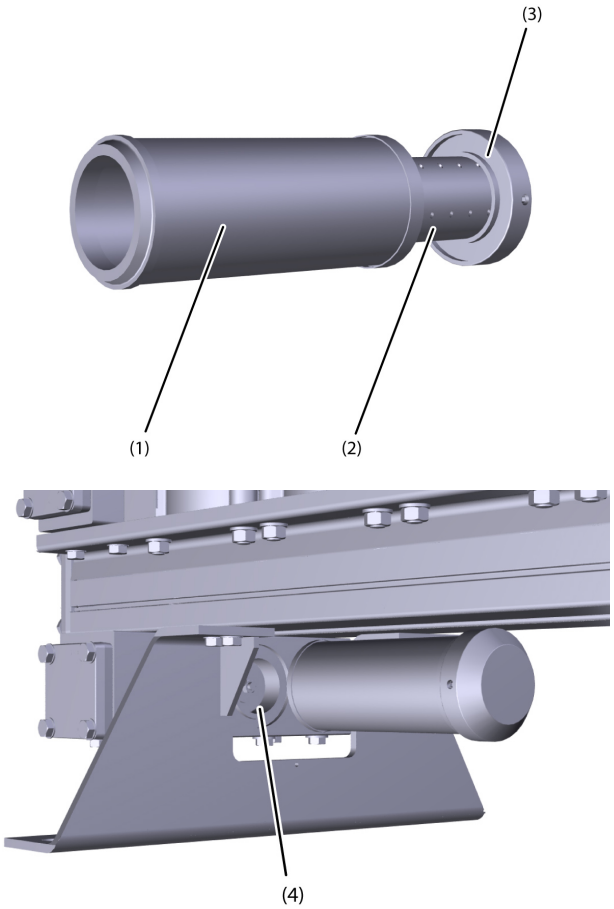

Procedure:

The exhaust silencer is located under the lower manifold.

Unscrew the exhaust silencer assembly, from the exhaust flange plate and remove the exhaust silencer.

Remove the exhaust silencer **(1)** from the baffle **(2)** and replace. The element should be inserted into the groove **(3)** in the baffle end cap.

N.B. The exhaust silencer baffle is intended for reuse; however this should be checked for any damage prior to refitting.

Screw the exhaust silencer assembly back into the exhaust flange plate **(4)**, ensuring that the exhaust silencer element is inserted into the groove in the exhaust flange plate.

Reset the exhaust silencer service countdown timers (MXA & MXS only).

3.5 Service B – Filter Element Change

Kit No: Refer to the Filter User Guide (171184000)

Warning

Ensure that the dryer is electrically and pneumatically de-energised and fully de-pressurised before continuing with this procedure.

Warning

Ensure that the condensate drain isolation ball valves are closed on the inlet filters. Failure to do so could result in pressurised condensate being forced into the depressurised filter housing, resulting in damage or injury.

It is recommended that suitable gloves be worn, when handling used filter elements.

It is recommended that suitable respiratory mask is worn, when handling used dust filter elements.

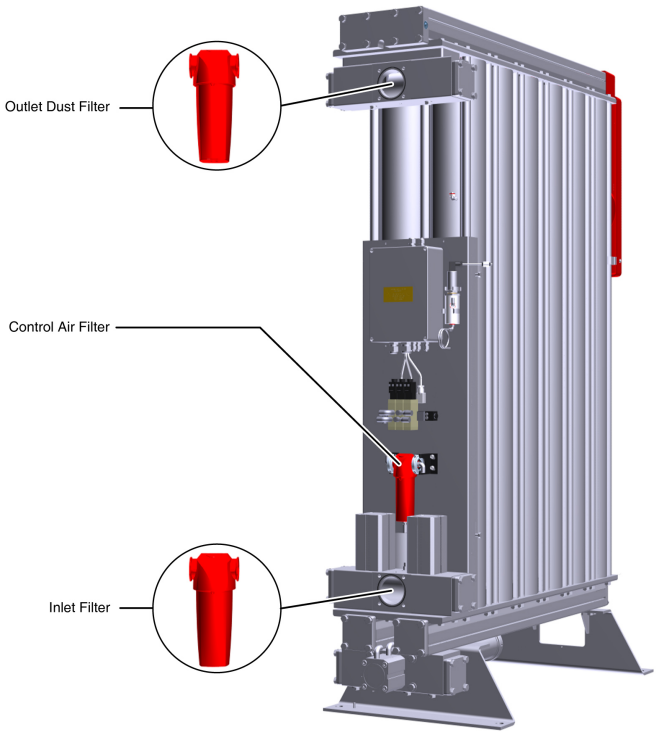

Procedure:

The combination of filters on the inlet and outlet of the dryer is dependent upon the dryer size and installation configuration. The replacement element codes can be found on the filter housings.

When multiple grades of filtration are used, care should be taken to ensure that the replacement elements are fitted in the correct housing. Failure to do so will result in reduced dryer performance.

If the dryer is fitted with a controller mounting plate shroud, it will need to be removed in order to gain access to the control air filter. To do this, remove the 6 x M4 retaining screws that hold the shroud in place. Lift the shroud clear of the dryer and store it safely.

Refer to the instruction leaflets provided with the filter for specific details on element replacement.

After the dryer has been tested refit the shroud.

Reset the filter service countdown timers (MXA & MXS only)

3.6 Service C – Hygrometer Sensor Replacement

Kit No: 608203580

Ensure that the dryer is electrically and pneumatically de-energised and fully de-pressurised before continuing with this procedure.

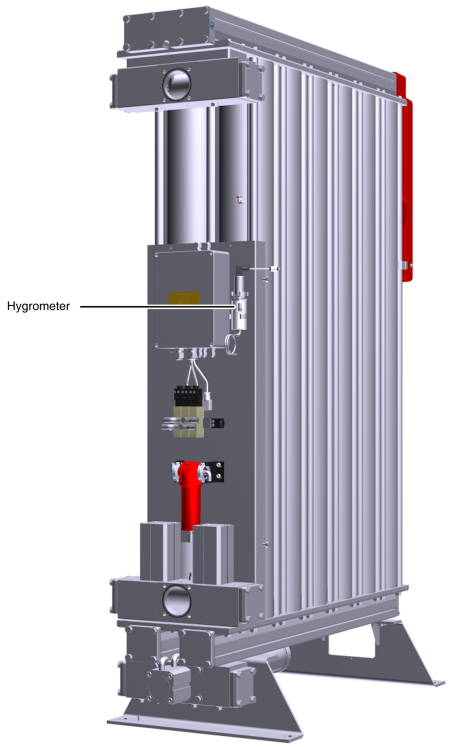

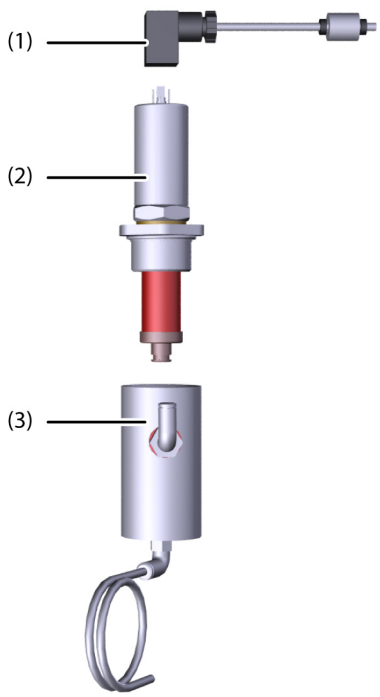

Procedure:

The hygrometer sensor is located on the dryer controller mounting plate located at the rear of the dryer.

Disconnect the hygrometer sensor cable at the DIN plug.

Unscrew the hygrometer sensor and filter assembly from the hygrometer sensor block and fit the replacement sensor and filter assembly.

After the dryer has been tested reset the hygrometer sensor service countdown timers (MXA & MXS only).

3.7 Service D – Valve Overhaul

Kit No: 608620091 (< 9 Barg)
608620092 (>9 Barg)

Ensure that the dryer is electrically and pneumatically de-energised and fully de-pressurised before continuing with these procedure.

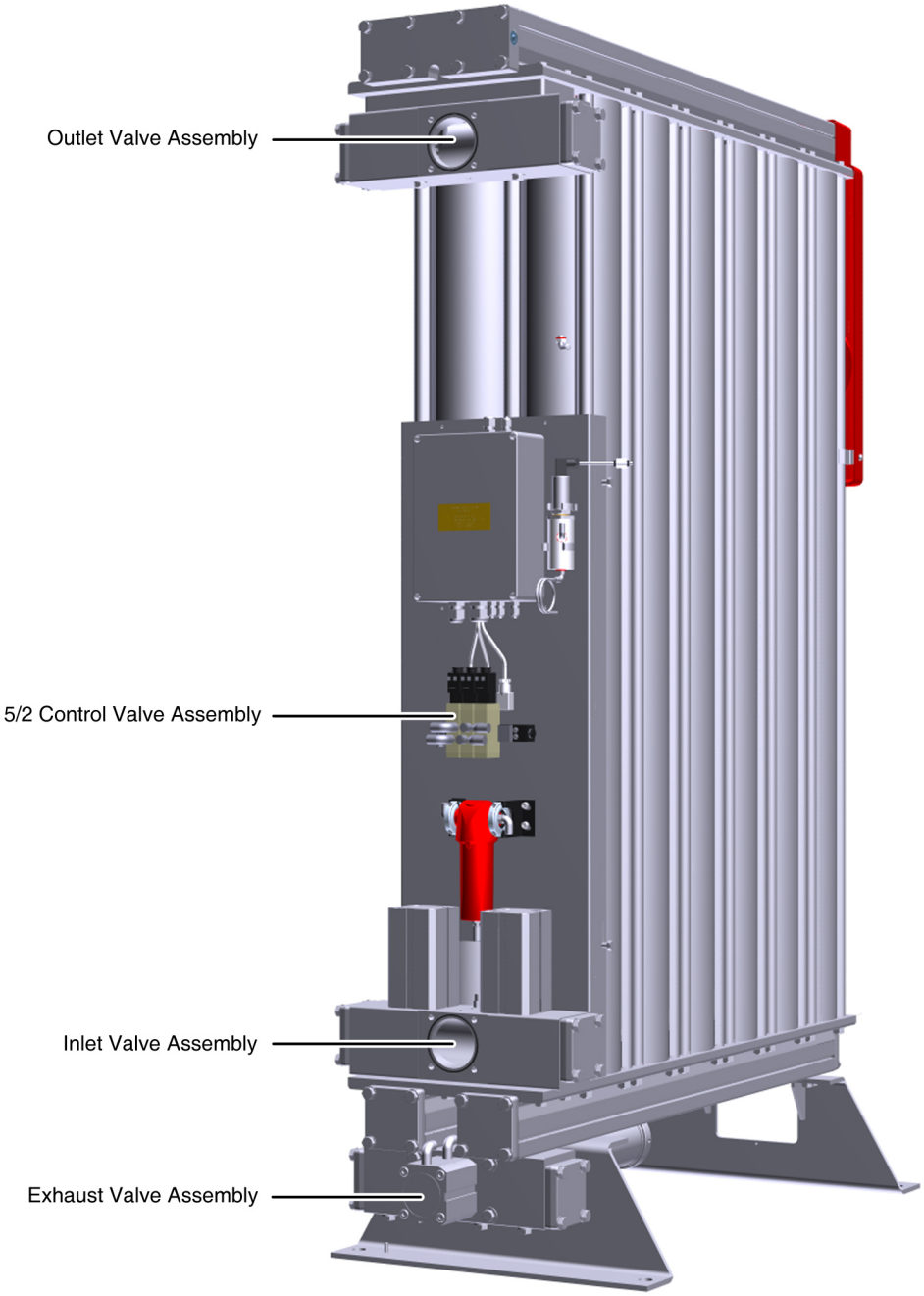

Procedure:

This Service covers the following inlet valve, exhaust valve, outlet valve and 5/2 control valve assemblies.

3.7.1 Inlet Valve Overhaul

If the dryer is fitted with a controller shroud remove the 4off M8 retaining bolts and lift the shroud clear of the dryer.

Make a note of the pneumatic tube configuration on the inlet valve cylinders and inlet head and disconnect the tubes at the push-in fittings.

If fitted, disconnect the inlet pressure sensor cable DIN plug and the inlet temperature sensor cable plug.

Disconnect the inlet pipe-work to the dryer, at the dryer inlet flange, which is retained by 4off M10 x 50mm Hex head bolts.

N.B. Ensure the inlet pipe-work is securely supported.

Remove the exhaust valve assembly **(2)**, as described in **3.7.2 Exhaust Valve Overhaul**, to allow unrestricted access to the inlet valve assembly fixings.

Remove the 8 x M10 retaining bolts **(1)** that secure the inlet valve assembly in place. Lift the assembly off the dryer and rest it onto a clean cushioned surface.

Extend the cylinder shaft **(3)** slightly and remove the M8 Binx nut **(4)** that holds the valve discs **(5)** to the cylinder shaft.

If the cylinders are to be replaced, remove the 4 M6 socket head retaining bolts **(6)** and carefully lift the cylinder off the valve housing.

Fit the replacement cylinders, ensuring that the nose o-rings **(7)** are in place.

N.B. Torque settings for the M6 socket head bolts – 20Nm (15ft.lb).

Extend the cylinder shaft and fit the replacement valve discs onto the shaft, ensuring that they are in the correct sequence and retain using the M8 Binx nut.

Re-mount the inlet valve assembly and the exhaust valve assembly onto the dryer, ensuring that all o-ring seals are replaced.

Reassemble the pipe-work (ensure flange o-ring is replaced), electrical connections and tubing.

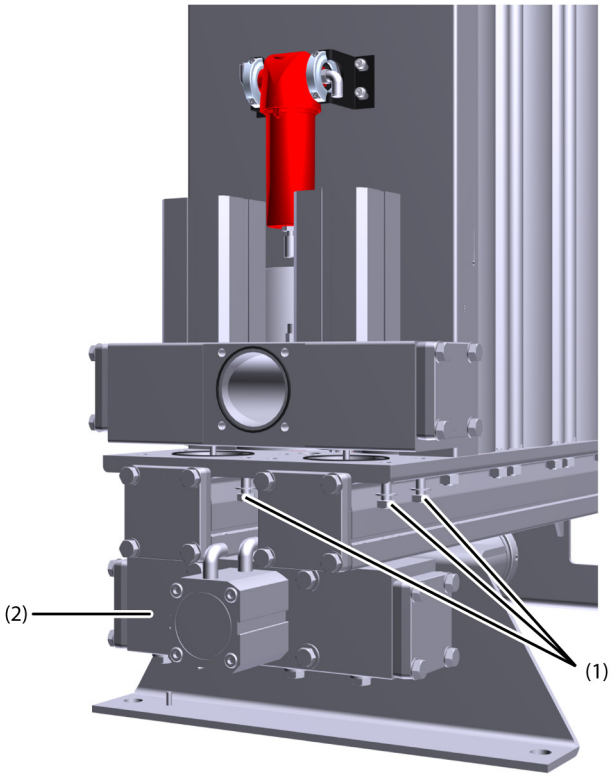

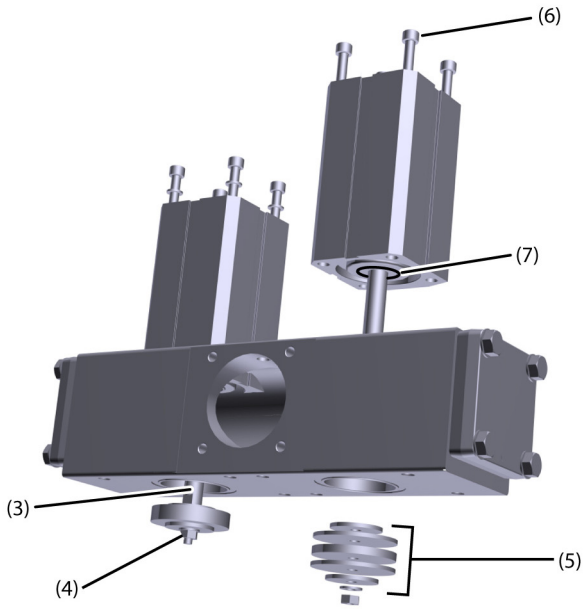

3.7.2 Exhaust Valve Overhaul

Remove the exhaust silencer assembly as described in 3.4.

Make a note of the pneumatic tube configuration on the exhaust valve cylinder and disconnect the tubes at the push-in fittings.

Remove the 8 x M10 retaining bolts **(2)** that secure the exhaust valve assembly **(1)** on to the lower manifold. Lift the assembly off the manifold and rest it on a clean cushioned surface. Remove the exhaust strike plate **(3)** and the end plate **(4).**

Extend the cylinder shaft slightly and position a spanner on the machined flat of the cylinder shaft. Remove the M8 Binx nut **(5)** retaining the valve discs to the cylinder shaft and remove the valve discs from the cylinder.

If the cylinder is to be replaced, remove the 4off M6 socket head bolts **(8)** retaining it to the exhaust housing.

Fit the replacement exhaust valve cylinder, ensuring that the nose o-ring **(9)** is in place.

N.B. Torque settings for the M6 socket head bolts - 20Nm (15ft.lb).

Extend the cylinder shaft and fit the replacement valve discs onto the shaft, ensuring that they are in the correct sequence and retain using the M8 Binx nut.

Reconnect the exhaust strike plate; ensure that the o-ring is replaced.

N.B. Torque settings for the M10 Hex head bolts - 34Nm (25 ft.lb).

Re-mount the exhaust valve housing onto the dryer, ensuring that all o-ring seals are replaced, including those retained on the 8off M10 socket head bolts.

N.B. Torque settings for the M10 Hex head bolts - 34Nm (25 ft.lb).

Reconnect the exhaust silencer, and tubing.

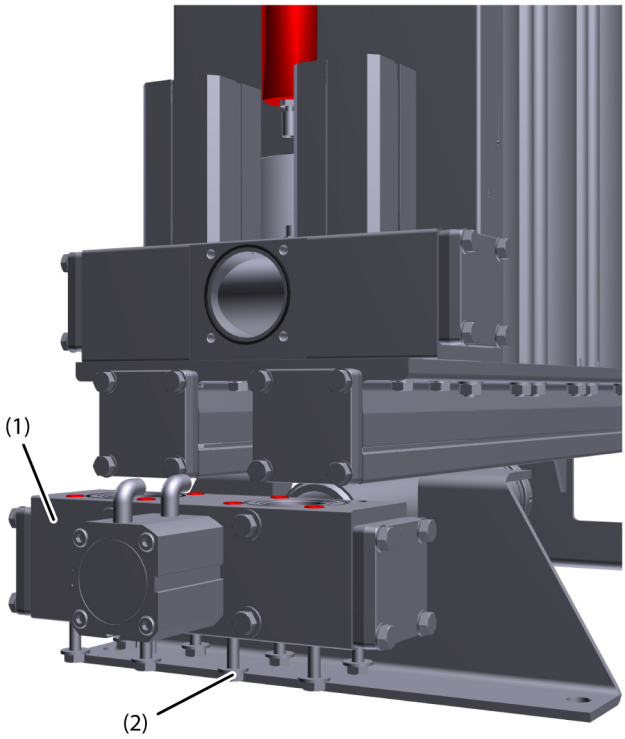

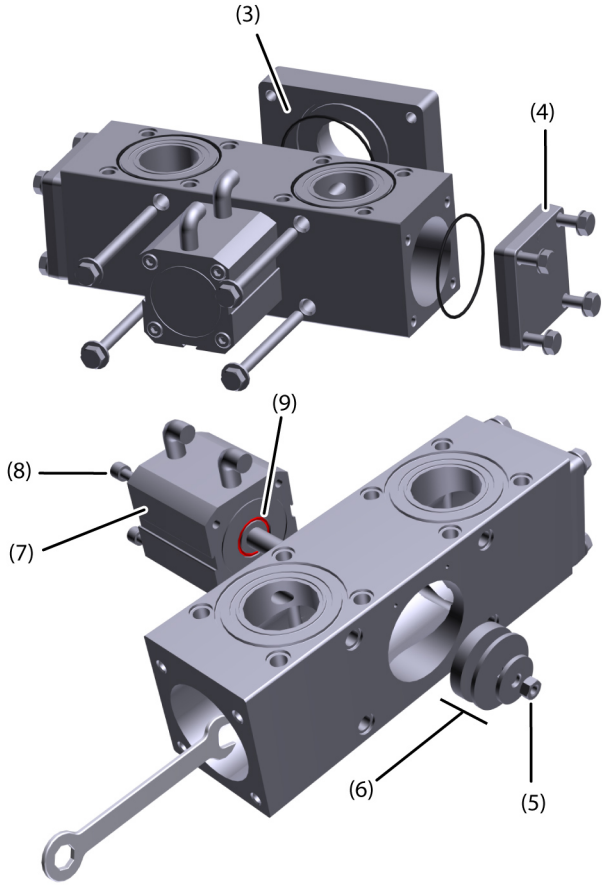

3.7.3 Outlet Valve Overhaul

If the dryer is fitted with DDS, disconnect the PTFE from the push-in fitting located on the underside of the outlet housing.

Disconnect the outlet pipe-work from the dryer at the dryer outlet flange.

N.B. Ensure the outlet pipe-work is securely supported.

Whilst supporting the assembly, remove the 8 x M10 Hex head bolts **(2)** that secure the outlet valve housing and outlet strike plate assembly **(1)** to the upper manifold.

Warning

The outlet valve housing and outlet strike plate assembly are not fastened together.

Remove the assembly from the dryer and rest it on a clean cushioned surface.

Lift the strike plate assembly **(4)** away from the outlet valve housing. Carefully remove the M10 Binx nut **(7)** that retains the valve assembly **(5)** on the strike plate. Remove the valve assembly away from the strike plate and discard.

The replacement valve will be pre-assembled so insert it into the strike plate from the bottom. Ensure that the check valve bush **(6)** is pushed in from the top of the strike plate.

Place the outlet strike plate assembly onto the outlet valve housing, ensuring that the conical spring is sitting correctly on the locating disc in the bottom of the valve housing.

Re-mount the outlet valve housing and outlet strike plate assembly onto the dryer, ensuring that all o-ring seals are replaced.

N.B. Torque settings for the M10 Hex head bolts - 34Nm (25 ft.lb).

Reconnect the outlet pipe-work to the dryer outlet flange, and the PTFE DDS pipe to the push-in fitting located on the underside of the outlet housing.

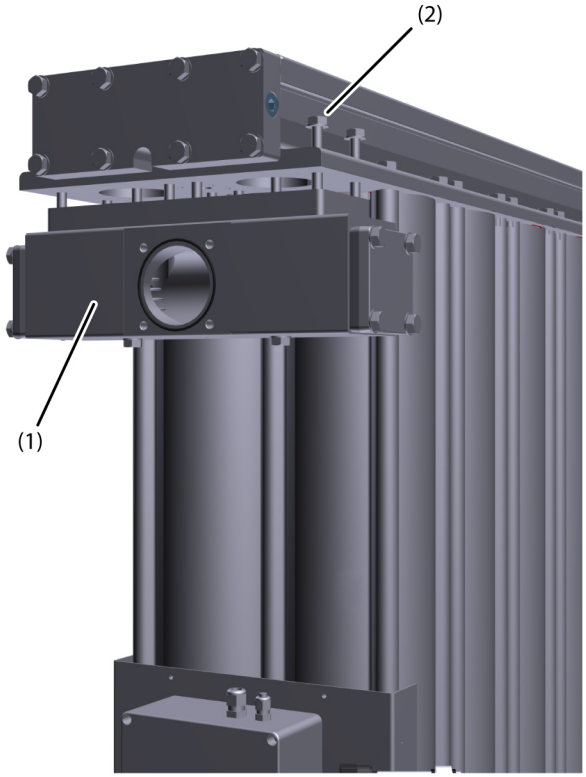

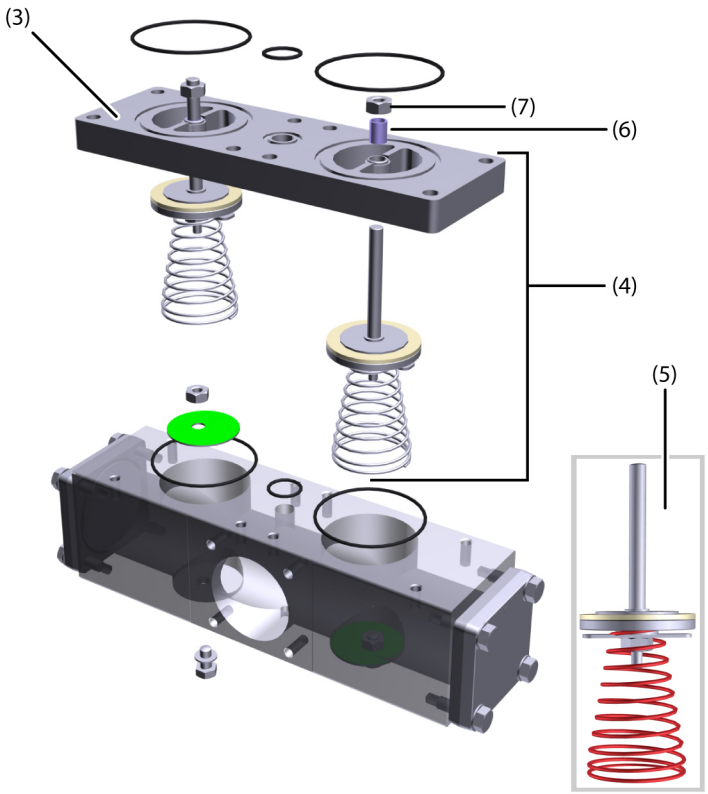

3.7.4 5/2 Control Valve Overhaul

Disconnect the pneumatic tubes at the push-in fittings on each of the 5/2 control valves being replaced **(1)**.

N.B. Make a note of which pneumatic tube is connected to which fitting for re-assembly.

If the entire 5/2 control valve assembly is being replaced, disconnect the tube at the manifold push-in fitting **(2)**.

Disconnect the solenoid plug on each of the 5/2 control valves being replaced **(3)**.

N.B. Make a note of which solenoid plug is connected to each solenoid for re-assembly.

Remove the 4off screws **(4)** retaining the valve manifold to the dryer controller mounting plate.

If replacing single valves remove the 2off M3 x25Skt Head screws, located on the rear of the manifold, retaining the 5/2 control valve to the valve manifold. Replace the valve ensuring that the o-ring seal is in place.

N.B. Torque settings for the M10 Hex head bolts - 34Nm (25 ft.lb).

If the entire 5/2 control valve assembly is being replaced replace the valve assembly and reconnect the tubing and solenoid plugs.

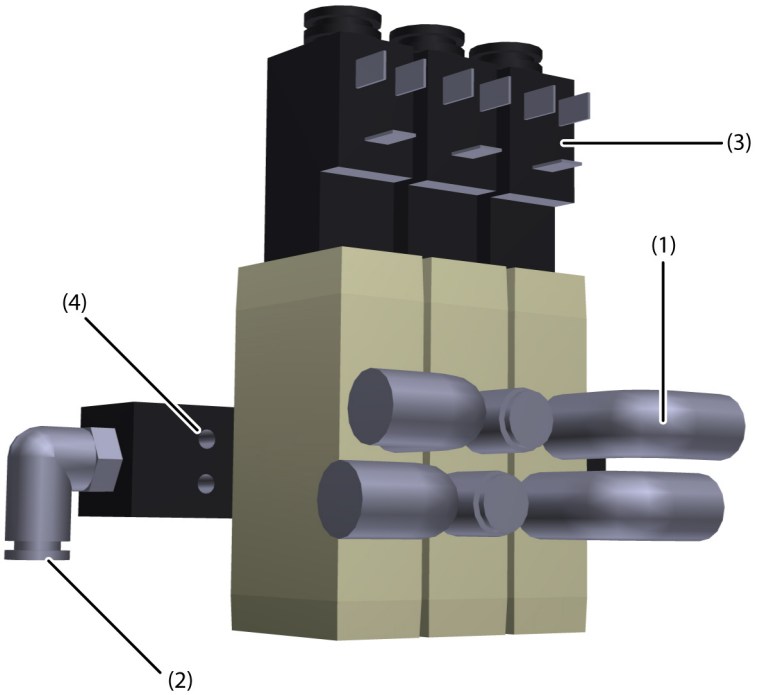

3.8 Service E – Desiccant Change

Kit No:	AA	11.2 Litre Bag	608203661	See table below
	MS	11.2 Litre Bag	608203662	See table below
	WS	11.2 Litre Bag	608203663	See table below
	Kit: Column Seals MX		608620098	1
	Snow storm filler		608201051	1

	MX102C			MX103C			MX103			MX104			MX105			MX106			MX107			MX108			MX109	MX110
	-20	**-40**	**-70**	**-20**	**-40**	**-70**	**-20**	**-40**	**-70**	**-20**	**-40**	**-70**	**-20**	**-40**	**-70**	**-20**	**-40**	**-70**	**-20**	**-40**	**-70**	**-20**	**-40**	**-70**	**-70**	**-70**
Dryfil AA	9	8		13	12		16	14		21	19		26	24		31	28		36	33		41	37			
Dryfil MS		1	7		2	11		2	13		3	17		3	21		4	25		4	29		6	30	37	42
Dryfil WS			2			3			4			5			6			7			8			9	10	11
Seals	1	1	1	1	1	1	1	1	1	1	1	1	1	1	1	1	1	1	1	1	1	1	1	1	1	1
Silencer	1	1	1	1	1	1	1	1	1	2	2	2	2	2	2	2	2	2	3	3	3	3	3	3	3	3

Ensure that the dryer is electrically and pneumatically de-energised and fully de-pressurised before continuing with this procedure.

Ensure that the condensate drain isolation ball valves are closed on the inlet filters. Failure to do so could result in pressurised condensate being forced into the depressurised filter housing, resulting in damage or injury.

It is recommended that suitable gloves be worn, when handling used filter elements.

It is recommended that suitable respiratory mask is worn, when handling used dust filter elements.

Suitable lifting equipment is required when lifting the upper manifold

Procedure:

Remove the outlet valve assembly as described in section 3.7.3.

Remove the lid of the controller enclosure and disconnect the HMI cable from the controller. Withdraw the HMI cable from the control box, removing the cable gland if necessary. Remove the M5 screws retaining the front fascia to the dryer body.

Disconnect the pressure gauge tubes at the push-in fittings on the upper manifold endplates. Make a note of which pneumatic tube is connected to which fitting for re-assembly. Withdraw the HMI cable through the HMI cable routing holes provided at the front and rear of the upper manifold. The front fascia is now fully disconnected from the dryer body can be placed to one side to prevent risk of damage.

Remove the M12 x 50 bolts **(1)** that secure the upper manifold **(2)** to the dryer columns **(3)**. Using suitable lifting equipment lift the upper manifold clear of the dryer. Tapped holes are provided in the upper manifold for eyebolts to ease lifting. Once clear of the dryer replace the o-ring seals on the manifold.

Remove the desiccant from the columns using an industrial vacuum cleaner. Ensure that the columns are completely empty and free of dust. Visually inspect the column and lower manifold desiccant bed support screens for signs of damage.

Fill the columns with the replacement desiccant using a snowstorm filler **(4)**. Ensure that all the columns are equally filled and that there is no desiccant in the column bolt holes.
N.B. Failure to use the appropriate snowstorm filler will result in degraded performance and generation of dust, due to a reduced packing density.

Insert guide bars **(5)** into the column bolt holes as shown and, using suitable lifting equipment, carefully lower the top manifold down onto the columns. Once in position secure the manifold using the M12 x 50 bolts (Torque setting: 27Nm (20ft.lb)). Start with the bolts in the centre of the manifold and work outwards. Once the bolts are secured repeat the process to an increased torque setting of 40Nm (20ft.lb)

Reconnect the pressure gauge tubes to the upper manifold and refit front fascia. Route the HMI cable to the controller via the HMI cable routing holes provided at the front and rear of the upper manifold. Feed the cable into the controller enclosure, ensuring that cable glands are tight and reconnect to the controller; connections are detailed in the section 5 of this manual.

Reconnect the outlet valve assembly and pipe-work, ensuring that the flange o-ring is replaced.

N.B. Torque settings for the M10 Hex head bolts - 34Nm (25 ft.lb).

Reset the desiccant service countdown timer.

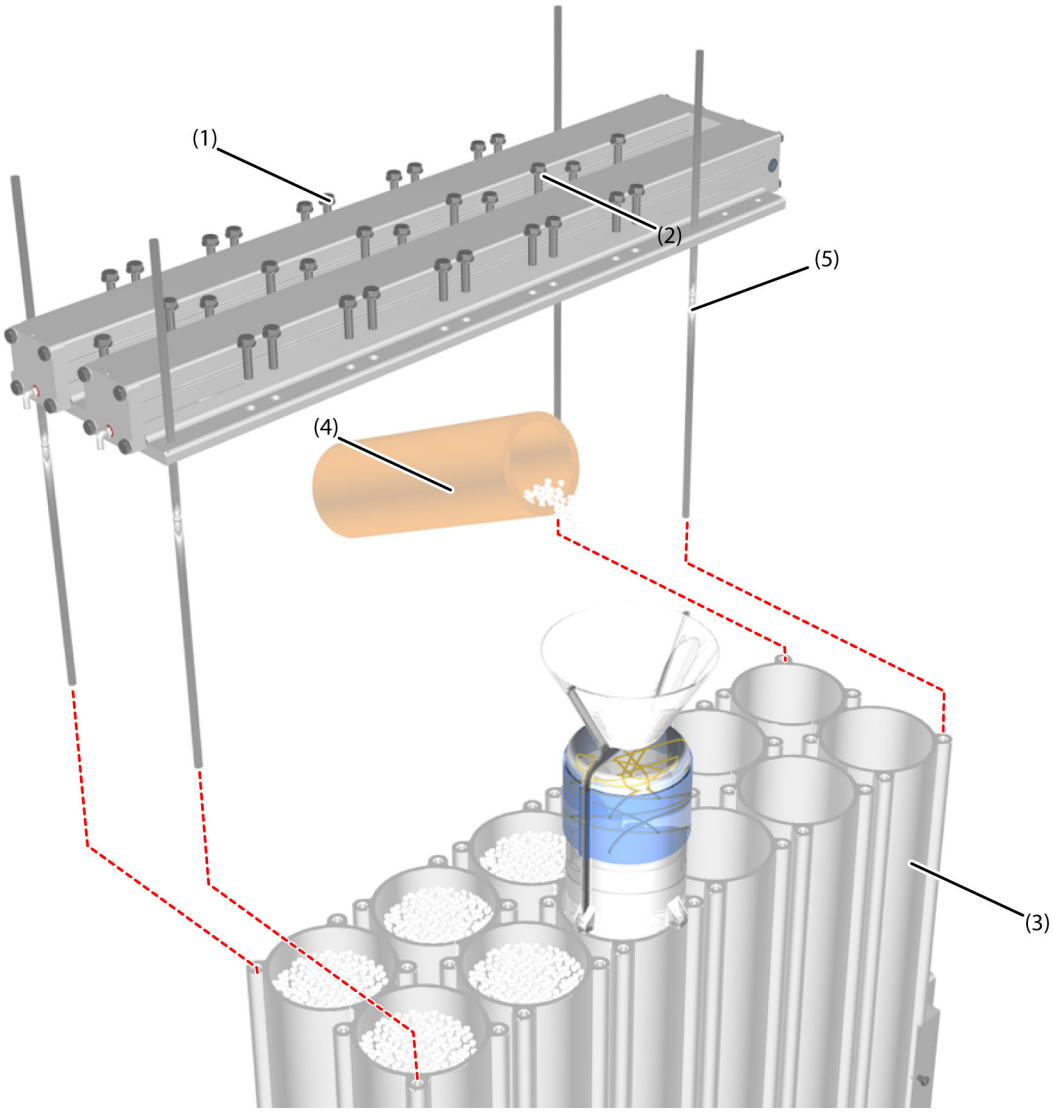

4 Wiring Schematics

BASED ON B.S.8888

DO NOT SCALE IF IN DOUBT ASK

DIMENSIONS IN MILLIMETRES

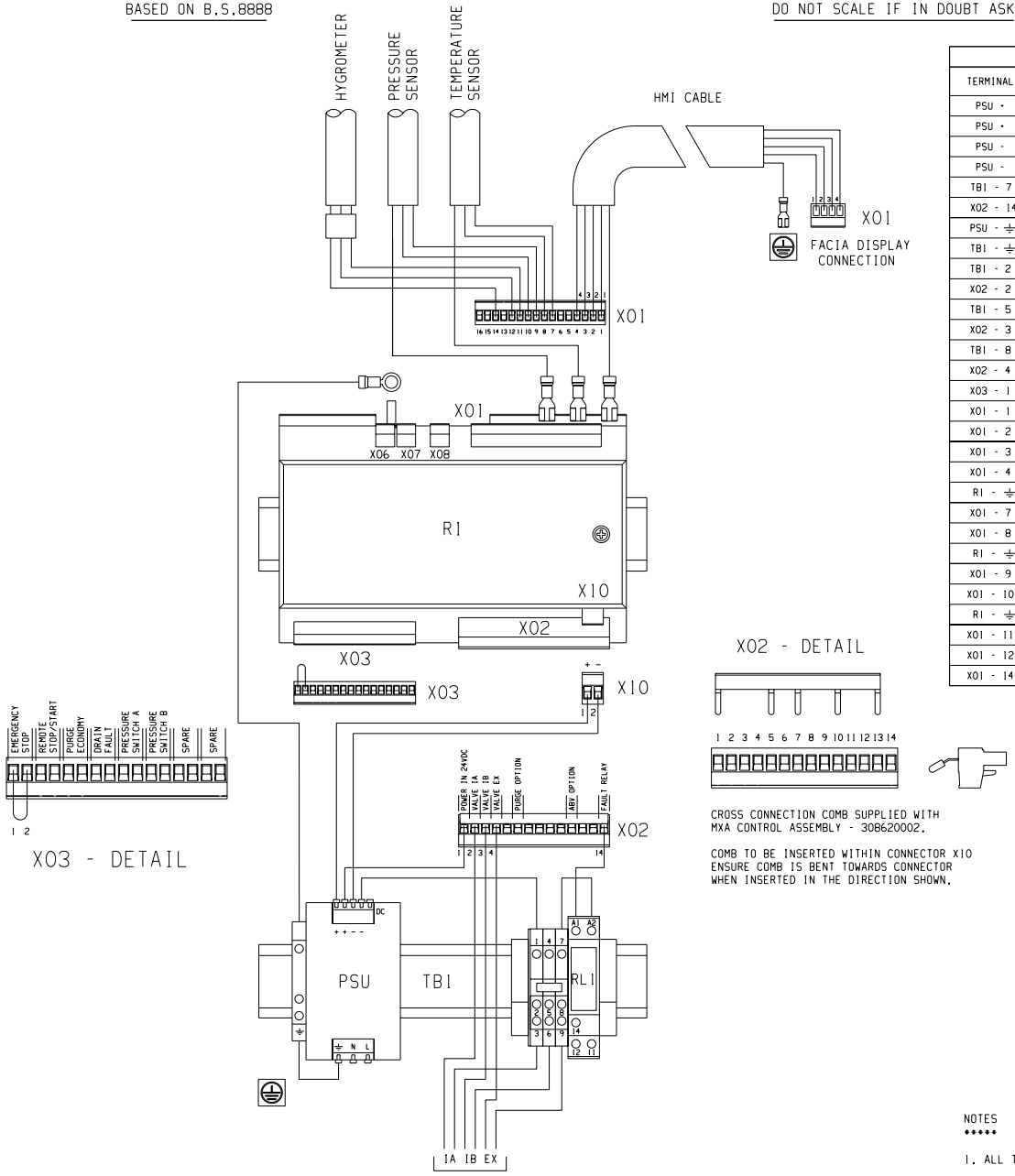

CROSS CONNECTION COMB SUPPLIED WITH MXA CONTROL ASSEMBLY - 308620002.

COMB TO BE INSERTED WITHIN CONNECTOR X10 ENSURE COMB IS BENT TOWARDS CONNECTOR WHEN INSERTED IN THE DIRECTION SHOWN.

MXA CONTROL BOX CONNECTIONS							
TERMINAL	WIRE LENGTH	WIRE END TERMINATION	TERMINAL	WIRE LENGTH	WIRE END TERMINATION	COLOUR	CABLE TYPE
PSU +	170 mm	BOOTLACE	X10 - 1	-	BOOTLACE	BLACK	0.75mm TRI-RATED
PSU +	150 mm	BOOTLACE	X02 - 1	-	BOOTLACE	BLACK	0.75mm TRI-RATED
PSU -	170 mm	BOOTLACE	X10 - 2	-	BOOTLACE	BLACK	0.75mm TRI-RATED
PSU -	150 mm	BOOTLACE	TB1 - 1	-	BOOTLACE	BLACK	0.75mm TRI-RATED
TB1 - 7	80 mm	BOOTLACE	RL1 - A2	-	BOOTLACE	BLACK	0.75mm TRI-RATED
X02 - 14	100 mm	BOOTLACE	RL1 - A1	-	BOOTLACE	BLACK	0.75mm TRI-RATED
PSU - ⏚	120 mm	BOOTLACE	TB1 - ⏚	-	BOOTLACE	GREEN/YELLOW	1.0mm TRI-RATED
TB1 - ⏚	220 mm	BOOTLACE	R1 - ⏚	-	M4 RED RING	GREEN/YELLOW	1.0mm TRI-RATED
TB1 - 2	120 mm	BOOTLACE	INLET A	-	PLUG	BLUE	SEE MX VALVE CONNECTOR SET DRAWING NO. 278620480
X02 - 2	165 mm	BOOTLACE		-		BROWN	
TB1 - 5	120 mm	BOOTLACE	INLET B	-	PLUG	BLUE	
X02 - 3	165 mm	BOOTLACE		-		BROWN	
TB1 - 8	120 mm	BOOTLACE	EXHAUST	-	PLUG	BLUE	
X02 - 4	165 mm	BOOTLACE		-		BROWN	
X03 - 1	80 mm	BOOTLACE	X03 - 2	-	BOOTLACE	BLACK	0.75mm TRI-RATED
X01 - 1	90 mm	BOOTLACE	X01 - 1	90 mm	BOOTLACE	BLACK 1	SEE HMI CABLE DRAWING NO. 278620664
X01 - 2	90 mm	BOOTLACE	X01 - 2	90 mm	BOOTLACE	BLACK 2	
X01 - 3	90 mm	BOOTLACE	X01 - 3	90 mm	BOOTLACE	BLACK 3	
X01 - 4	90 mm	BOOTLACE	X01 - 4	90 mm	BOOTLACE	BLACK 4	
R1 - ⏚	90-mm	RED FEMALE CRIMP	FACIA - ⏚	90-mm	RED FEMALE CRIMP	GREEN/YELLOW	
X01 - 7	-	BOOTLACE	TEMPERATURE SENSOR	-	PLUG	RED	SEE MX TEMPERATURE SENSOR CABLE DRAWING NO. 278620662
X01 - 8	-	BOOTLACE		-		BLUE	
R1 - ⏚	-	RED FEMALE CRIMP		-		GREEN/YELLOW	
X01 - 9	-	BOOTLACE	PRESSURE SENSOR		PLUG	RED	SEE MX PRESSURE SENSOR CABLE DRAWING NO. 278620662
X01 - 10	-	BOOTLACE		-		BLUE	
R1 - ⏚	-	RED FEMALE CRIMP		-		GREEN/YELLOW	
X01 - 11	-	BOOTLACE	HYGROMETER		PLUG	RED	SEE MX HYG SENSOR CABLE DRAWING NO. 278620662
X01 - 12	-	BOOTLACE		-		GREEN	
X01 - 14	-	BOOTLACE		-		BLACK	

REV	DCO No.	DATE	NAME
0	46334	20Feb2004	AC

NOTES
*****

1. ALL TERMINAL AND CONNECTOR NUMBER IDENTIFICATION SHOWN IS FOR REFERENCE ONLY.

2. NOTE ORIENTATION OF CONNECTORS WHEN WIRING.

DOMNICK HUNTER LIMITED
DUKESWAY, TEAM VALLEY.
GATESHEAD, TYNE & WEAR.
NE11 0PZ, ENGLAND.
Tel: 0191 402 9000
Telex: 537282
Telefax: 0191 482 6296

THE ORIGINAL OF THIS DRAWING IS COPYRIGHT AND CONTAINS CONFIDENTIAL INFORMATION. IT IS THE PROPERTY OF DOMNICK HUNTER LIMITED WITHOUT WHOSE PERMISSION IT MAY NOT BE COPIED, SHOWN OR HANDED TO A THIRD PARTY OR OTHERWISE USED AND IT IS TO BE RETURNED PROMPTLY UPON REQUEST TO DOMNICK HUNTER. ©2004 A2

MATERIAL	SCALE		DRAWN	CHECKED	APPROVED	TITLE	DRG. No	SHEET
GEN. ARRGT.	1 : 1	NAME	AC	PH	TK	MXA WIRING SCHEMATIC	008620003	1 of 1
		DATE	20Feb2004	13Apr2004	4May2004			

BASED ON B.S.8888

DO NOT SCALE IF IN DOUBT ASK

DIMENSIONS IN MILLIMETRES

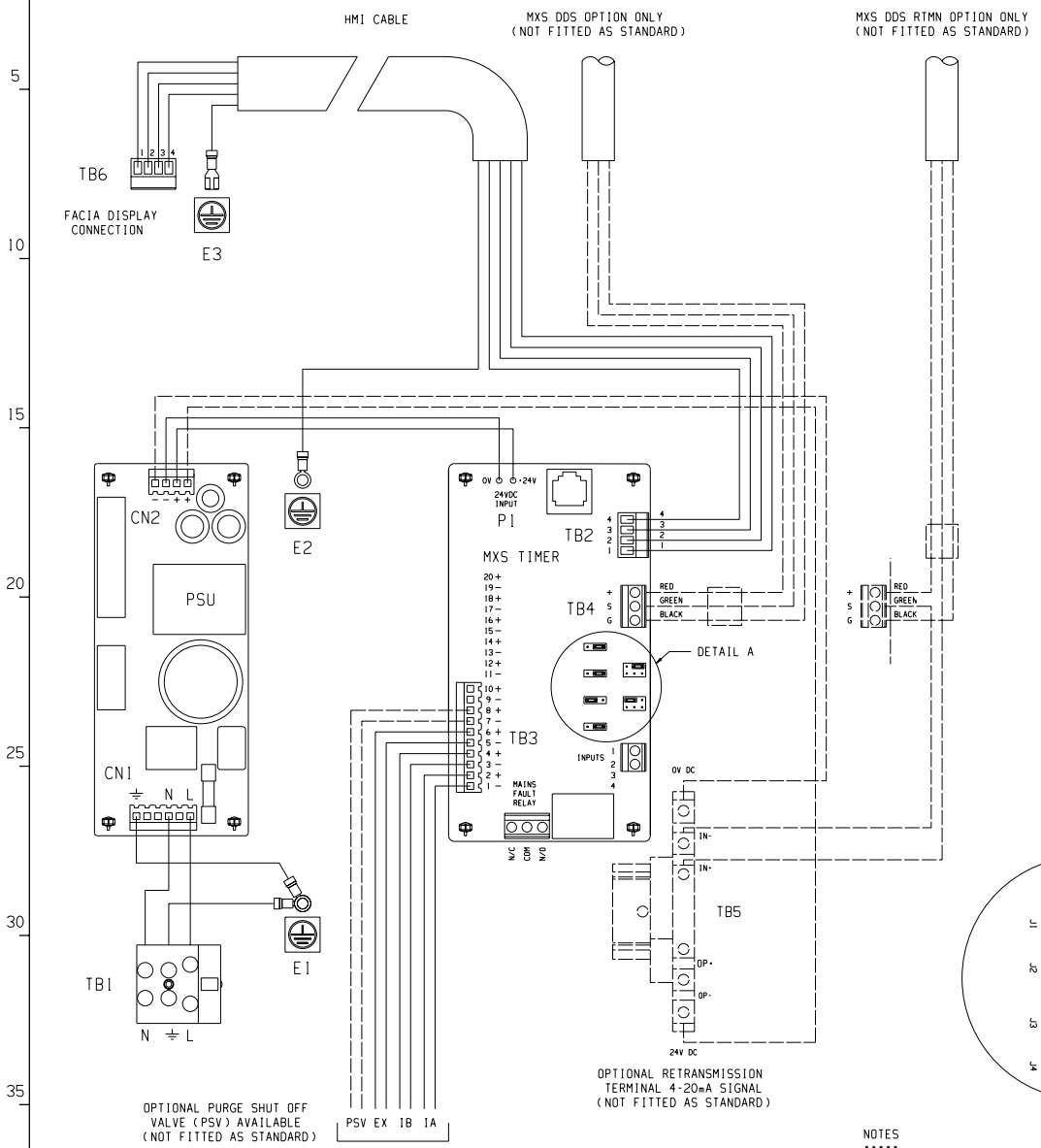

MXS NON DDS CONTROL BOX CONNECTIONS (REAR PLATE ASSEMBLY 458621230)							
TERMINAL	WIRE LENGTH	WIRE END TERMINATION	TERMINAL	WIRE LENGTH	WIRE END TERMINATION	COLOUR	CABLE TYPE
CN1 - L	-	MOLEX TERMINAL	TB1 - L	-	BARE	BROWN	SEE MOLEX CRIMP SET DRAWING NO. 278620662
CN1 - N	-	MOLEX TERMINAL	TB1 - N	-	BARE	BLUE	
CN1 - ⏚	-	MOLEX TERMINAL	E1	-	M4 RED RING	GREEN/YELLOW	
TB1 - ⏚	80 mm	BARE	E1	N/A	M4 RED RING	GREEN/YELLOW	1.0mm TRI-RATED
P1 - 0V	-	FITTED TO TIMER	CN2 -	-	MOLEX CRIMP	BLACK	SEE MXS TIMER DRAWING NO. 278620510
P1 - 24V	-	FITTED TO TIMER	CN2 +	-	MOLEX CRIMP	RED	
TB2 - 1	90 mm	BOOTLACE	TB6 - 1	90 mm	BOOTLACE	BLACK	SEE HMI CABLE DRAWING NO. 278620664
TB2 - 2	90 mm	BOOTLACE	TB6 - 2	90 mm	BOOTLACE	BLACK	
TB2 - 3	90 mm	BOOTLACE	TB6 - 3	90 mm	BOOTLACE	BLACK	
TB2 - 4	90 mm	BOOTLACE	TB6 - 4	90 mm	BOOTLACE	BLACK	
E2	90 mm	M4 RED RING	E3	90 mm	RED FEMALE CRIMP	GREEN/YELLOW	
TB3 - 1	-	MOLEX CRIMP	INLET A	-	PLUG	BLUE	SEE MX VALVE CONNECTOR SET DRAWING NO. 278620480
TB3 - 2	-	MOLEX CRIMP		-		BROWN	
TB3 - 3	-	MOLEX CRIMP	INLET B	-	PLUG	BLUE	
TB3 - 4	-	MOLEX CRIMP		-		BROWN	
TB3 - 5	-	MOLEX CRIMP	EXHAUST	-	PLUG	BLUE	
TB3 - 6	-	MOLEX CRIMP		-		BROWN	

MXS DDS CONTROL BOX CONNECTIONS (REAR PLATE ASSEMBLY 458621231)							
TERMINAL	WIRE LENGTH	WIRE END TERMINATION	TERMINAL	WIRE LENGTH	WIRE END TERMINATION	COLOUR	CABLE TYPE
TB4 - +	-	BOOTLACE	HYGROMETER	-	PLUG	RED	SEE MX HYG SENSOR CABLE DRAWING NO. 278620662
TB4 - S	-	BOOTLACE		-		GREEN	
TB4 - G	-	BOOTLACE		-		BLACK	

MXS DDS RETRANSMISSION CONTROL BOX CONNECTIONS (REAR PLATE ASSEMBLY 458621232)							
TERMINAL	WIRE LENGTH	WIRE END TERMINATION	TERMINAL	WIRE LENGTH	WIRE END TERMINATION	COLOUR	CABLE TYPE
TB4 - +	-	BOOTLACE	HYGROMETER	-	PLUG	RED	SEE MX HYG RTMN SENSOR CABLE DRAWING NO. 278620721
TB4 - G	-	BOOTLACE		-		BLACK	
TB5 - IN-	-	BOOTLACE	TB4 - S	-	BOOTLACE	GREEN	
TB5 - IN+	-	BOOTLACE	HYGROMETER	-	PLUG	GREEN	
TB5 - 24V	400 mm	BOOTLACE	CN2 +	-	MOLEX CRIMP	RED	0.5mm TRI-RATED
TB5 - 0V	300 mm	BOOTLACE	CN2 -	-	MOLEX CRIMP	BLACK	0.5mm TRI-RATED

MXS PSV CONTROL BOX CONNECTIONS							
TERMINAL	WIRE LENGTH	WIRE END TERMINATION	TERMINAL	WIRE LENGTH	WIRE END TERMINATION	COLOUR	CABLE TYPE
TB3 - 7	-	MOLEX CRIMP	PSV	-	PLUG	BLUE	SEE MX PSV CABLE PLUG ASSY DRAWING NO. 308620005
TB3 - 8	-	MOLEX CRIMP		-		BROWN	

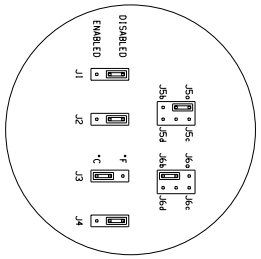

DETAIL A

MXS TIMER JUMPER POSITIONS	MXS CONTROLLER OPTION		
	MXS	MXS DDS	MXS DDS RTMN
J1 - HYGROMETER	DISABLED	ENABLED	ENABLED
J2 - MOISTURE OVER-RIDE	DISABLED	DISABLED	DISABLED
J3 - DISPLAY UNITS - °C	ENABLED	ENABLED	ENABLED
- °F	------	------	------
J4 - SERVICE CHANGE TIMER	DISABLED	DISABLED	DISABLED
J5 - CYCLE OPTIONS			
J5a - CYCLE MODE 1	FITTED	FITTED	FITTED
J5b - CYCLE MODE 2	------	------	------
J5c - CYCLE MODE 3	------	------	------
J5d - CUSTOM CYCLE	------	------	------
J6 - DEWPOINT SETPOINT			
J6a - -20°C	------	------	------
J6b - -40°C	FITTED	FITTED	FITTED
J6c - -70°C	------	------	------
J6d - CUSTOM VALUE	------	------	------

NOTES
*****

1. ALL TERMINAL AND CONNECTOR NUMBER IDENTIFICATION SHOWN IS FOR REFERENCE ONLY.
2. NOTE ORIENTATION OF CONNECTORS WHEN WIRING.

REV	DCO No.	DATE	NAME
1	57488	23Jan2007	BJ
0	46334	20Feb2004	AC

DOMNICK HUNTER LIMITED
DUKESWAY, TEAM VALLEY,
GATESHEAD, TYNE & WEAR,
NE11 0PZ, ENGLAND.
Tel: 0191 402 9000
Telex: 537282
Telefax: 0191 482 6296

THE ORIGINAL OF THIS DRAWING IS COPYRIGHT AND CONTAINS CONFIDENTIAL INFORMATION. IT IS THE PROPERTY OF DOMNICK HUNTER LIMITED WITHOUT WHOSE PERMISSION IT MAY NOT BE COPIED, SHOWN OR HANDED TO A THIRD PARTY OR OTHERWISE USED AND IT IS TO BE RETURNED PROMPTLY UPON REQUEST TO DOMNICK HUNTER. ©2004 A2

MATERIAL	SCALE		DRAWN	CHECKED	APPROVED	TITLE	DRG. No	SHEET
GEN. ARRGT.	1 : 1	NAME	AC	PH	TK	MXS WIRING SCHEMATIC	008620001	1 of 1
		DATE	20Feb2004	13Apr2004	4May2004			

5 Pneumatic Control Schematics

BASED ON B.S.8888

DO NOT SCALE IF IN DOUBT ASK

DIMENSIONS IN MILLIMETRES

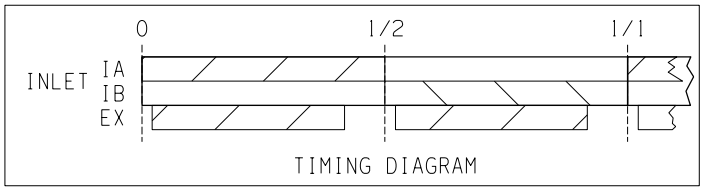

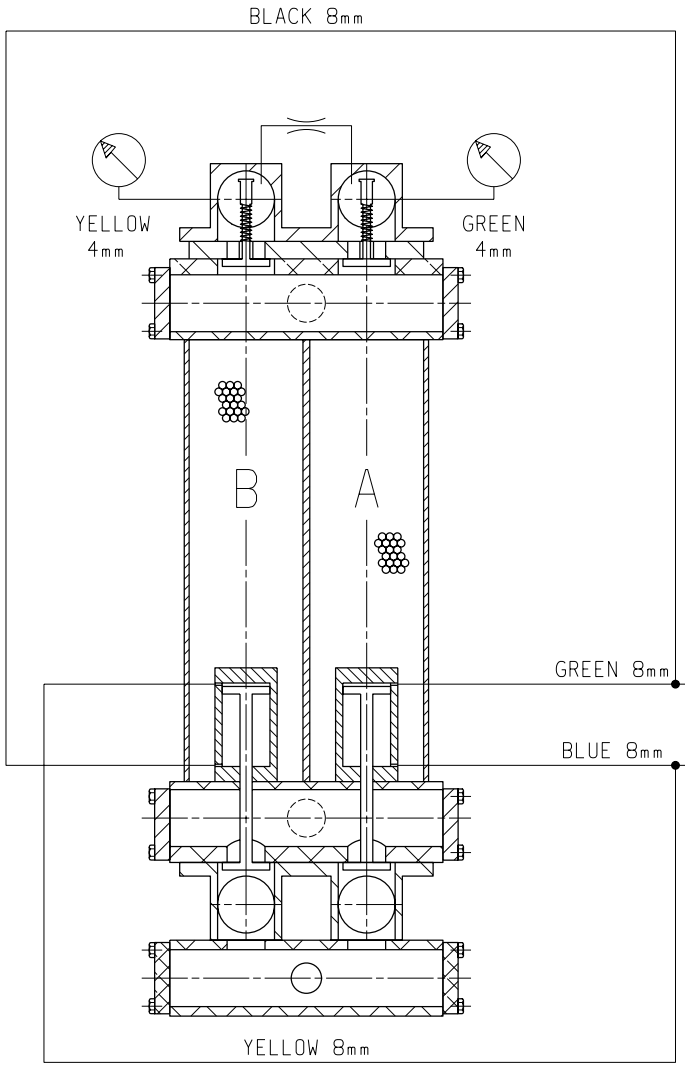

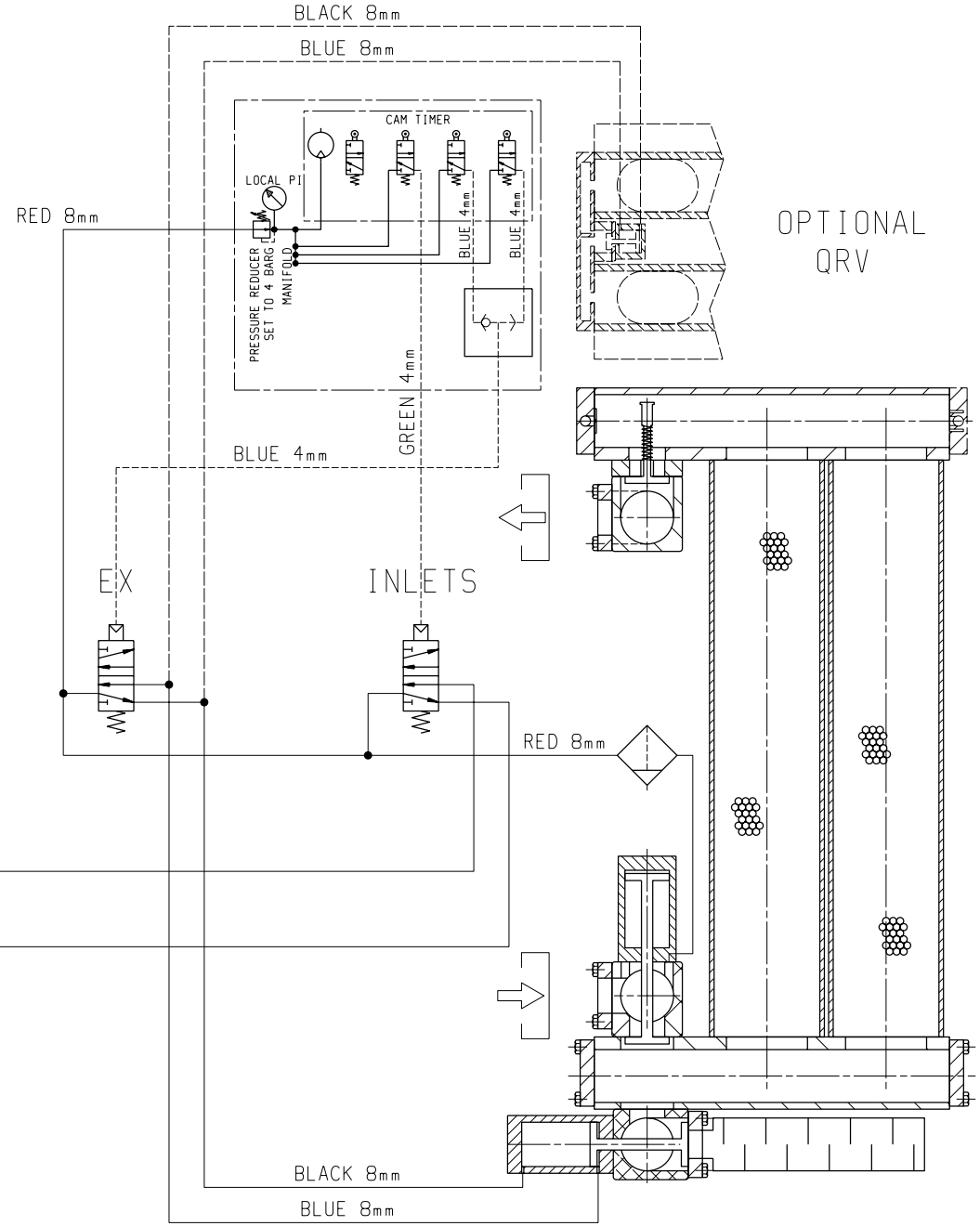

GENERAL TOLERANCES UNLESS OTHERWISE STATED

MACHINED DIMENSIONS
.XX ±0.13 UP TO 300 ±0.3
.X ±0.25 OVER 300 TO 600 ±0.6

POSITIONAL TOLERANCE
PLAIN HOLES ø0.13
TAPPED HOLES ø0.26
CONCENTRICITY TOLERANCE 0.13 TIR

MACHINED SURFACES INDICATED THUS
SURFACE TEXTURE TO BS 1134
VALUES IN MICROMETRES

ANGLES ±1/2°(EXCEPT CHAMFERS)

METRIC THREADS TO BS 3643 MED. CLASS
EXTERNAL 6g INTERNAL 6H
PIPE THREADS
PRESSURE TIGHT TO BS 21

SHEET METALWORK & FABRICATIONS
SHEET METALWORK DIMENSIONS
UP TO 500 ±0.5
OVER 500 TO 1000 ±1.0
OVER 1000 ±1.5

FABRICATED PARTS DIMENSIONS
UP TO 500 ±2
OVER 500 TO 1000 ±4
OVER 1000 ±6

POSITIONAL TOLERANCE FOR PLAIN & TAPPED HOLES
UP TO 500 ø1.0
OVER 500 ø2.0

REV	DCO No.	DATE	NAME
1	49278	20Sep2004	MG
0	48583	13Jul2004	MG

DOMNICK HUNTER LIMITED
DUKESWAY. TEAM VALLEY.
GATESHEAD,TYNE & WEAR,
NE11 0PZ. ENGLAND.
Tel: 0191 402 9000
Telex: 537282
Telefax: 0191 482 6296

THE ORIGINAL OF THIS DRAWING IS COPYRIGHT AND CONTAINS CONFIDENTIAL INFORMATION,IT IS THE PROPERTY OF DOMNICK HUNTER LIMITED WITHOUT WHOSE PERMISSION IT MAY NOT BE COPIED,SHOWN OR HANDED TO A THIRD PARTY OR OTHERWISE USED AND IT IS TO BE RETURNED PROMPTLY UPON REQUEST TO DOMNICK HUNTER. ©2004 A1

MATERIAL	SCALE	DRAWN	CHECKED	APPROVED	TITLE	DRG. No	SHEET
GEN. ARRGT.	1 : .3	NAME MG	TS	TK	MX PNEU CAM CONTROL SCHEMATIC	00862000B	1 of 1
		DATE 13Jul2004	13Jul2004	14Jul2004			

BASED ON B.S.8888

DO NOT SCALE IF IN DOUBT ASK

DIMENSIONS IN MILLIMETRES

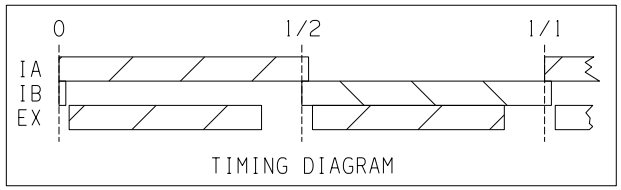

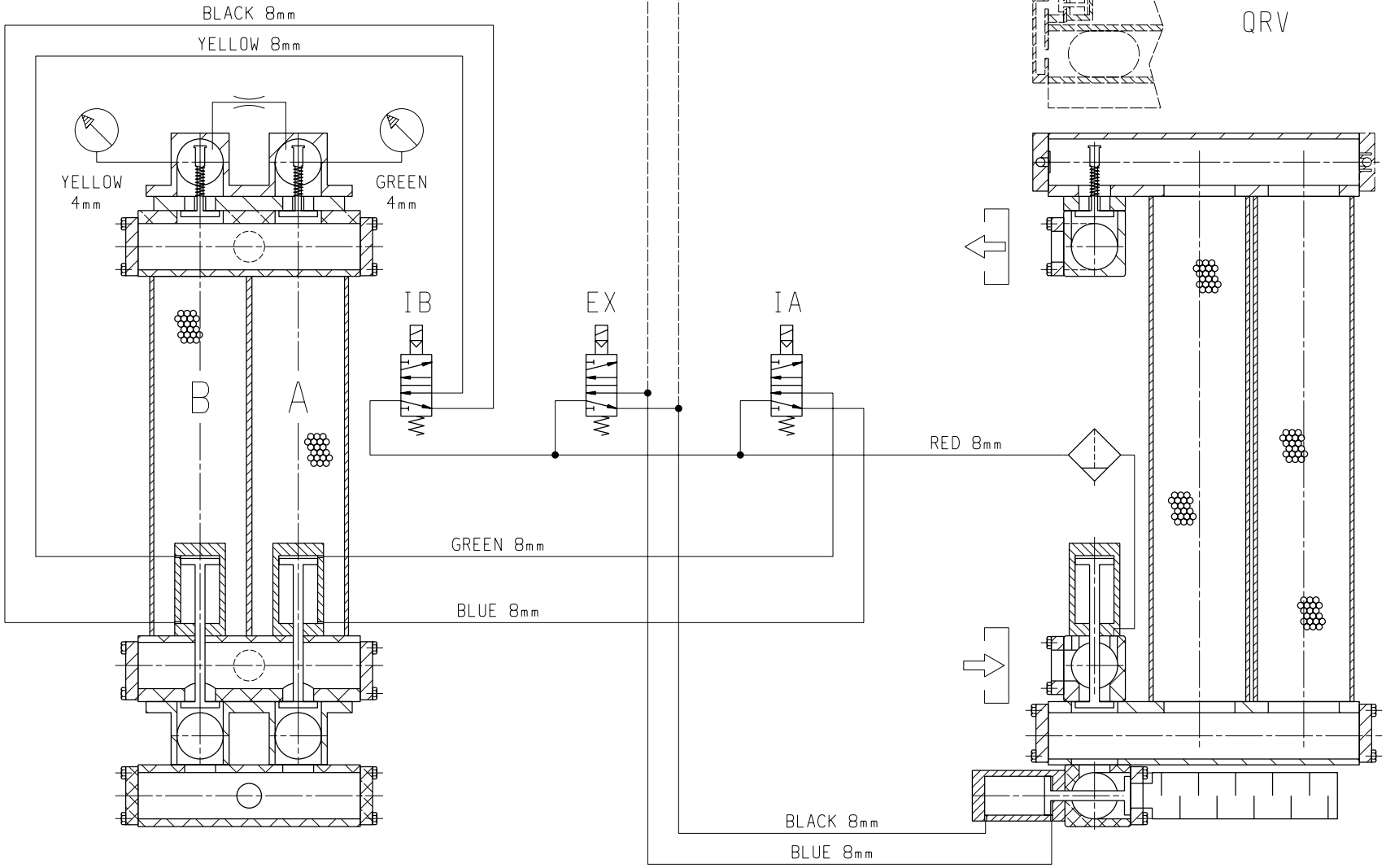

GENERAL TOLERANCES UNLESS OTHERWISE STATED

MACHINED DIMENSIONS
.XX ±0.13 UP TO 300 ±0.3
.X ±0.25 OVER 300 TO 600 ±0.5

POSITIONAL TOLERANCE
PLAIN HOLES ø0.13
TAPPED HOLES ø0.25
CONCENTRICITY TOLERANCE 0.13 TIR

MACHINED SURFACES INDICATED THUS
SURFACE TEXTURE TO BS 1134
VALUES IN MICROMETRES

ANGLES ±1/2°(EXCEPT CHAMFERS)

METRIC THREADS TO BS 3643 MED. CLASS
EXTERNAL 6g INTERNAL 6H
PIPE THREADS
PRESSURE TIGHT TO BS 21

SHEET METALWORK & FABRICATIONS
SHEET METALWORK DIMENSIONS
UP TO 500 ±0.5
OVER 500 TO 1000 ±1.0
OVER 1000 ±1.5

FABRICATED PARTS DIMENSIONS
UP TO 500 ±2
OVER 500 TO 1000 ±4
OVER 1000 ±6

POSITIONAL TOLERANCE FOR PLAIN & TAPPED HOLES
UP TO 500 ø1.0
OVER 500 ø2.0

REV	DCO No.	DATE	NAME
0	47758	5May2004	AC

DOMNICK HUNTER LIMITED
DUKESWAY. TEAM VALLEY.
GATESHEAD,TYNE & WEAR,
NE11 0PZ. ENGLAND.
Tel. 0191 402 9000
Telex: 537282
Telefax: 0191 482 6296

THE ORIGINAL OF THIS DRAWING IS COPYRIGHT AND CONTAINS CONFIDENTIAL INFORMATION,IT IS THE PROPERTY OF DOMNICK HUNTER LIMITED WITHOUT WHOSE PERMISSION IT MAY NOT BE COPIED,SHOWN OR HANDED TO A THIRD PARTY OR OTHERWISE USED AND IT IS TO BE RETURNED PROMPTLY UPON REQUEST TO DOMNICK HUNTER. ©2004 A1

MATERIAL	SCALE	DRAWN	CHECKED	APPROVED	TITLE	DRG. No	SHEET
GEN. ARRGT.	1 : .3	AC	PJ	TK	MX PNEUMATIC CONTROL SCHEM	008620006	1 of 1
		5May2004	5May2004	10May2004			

dh and **domnick hunter** are registered trademarks of **Parker Hannifin ltd.**

Parker Hannifin ltd has a continuous policy of product development and although the Company reserves the right to change specifications, it attempts to keep customers informed of any alterations. This publication is for general information only and customers are requested to contact your domnick hunter sales representative for detailed information and advice on a products suitability for specific applications. All products are sold subject to the Company's standard conditions of sale.

Copyright Parker Hannifin ltd 2008

Publication Reference: 01/08 Rev. 000
Stock No. 17 862 0077

filtration purification separation

bcas BRITISH COMPRESSED AIR SOCIETY LIMITED LRQ4003083 LRQ4001479

A division of Parker Hannifin Corporation

domnick hunter

Parker Hannifin ltd
Dukesway, Team Valley Trading Estate
Gateshead, Tyne and Wear
England NE11 0PZ
Tel: +44 (0)191 402 9000
Fax: +44 (0)191 482 6296
www.domnickhunter.com